Pre-Leaving Certificate Examination, 2017

Design & Communication Graphics
Ordinary Level
Section A (60 marks)

Time: 3 Hours

This examination is divided into three sections:

SECTION A	(Core - Short Questions)
SECTION B	(Core - Long Questions)
SECTION C	(Applied Graphics - Long Questions)

SECTION A
- Four questions are presented.
- Answer **any three** on the A3 sheet overleaf.
- All questions in Section A carry **20 marks** each.

SECTION B
- Three questions are presented.
- Answer **any two** on drawing paper.
- All questions in Section B carry **45 marks** each.

SECTION C
- Five questions are presented.
- Answer **any two** (i.e. the options you have studied) on drawing paper.
- All questions in Section C carry **45 marks** each.

General Instructions:
- *Construction lines must be shown on all solutions.*
- *Write the question number distinctly on the answer paper in Sections B and C.*
- *Work on one side of the drawing paper only.*
- *All dimensions are given in metres or millimetres.*
- *Write your Name, School Name and Teacher's Name in the box below and on all other sheets used.*

Name:

School Name:

Teacher's Name:

This Contour Map is part of Section C and should only be used for the answering of the Geologic Geometry Option (Question C-1).

Scale (1:1000)

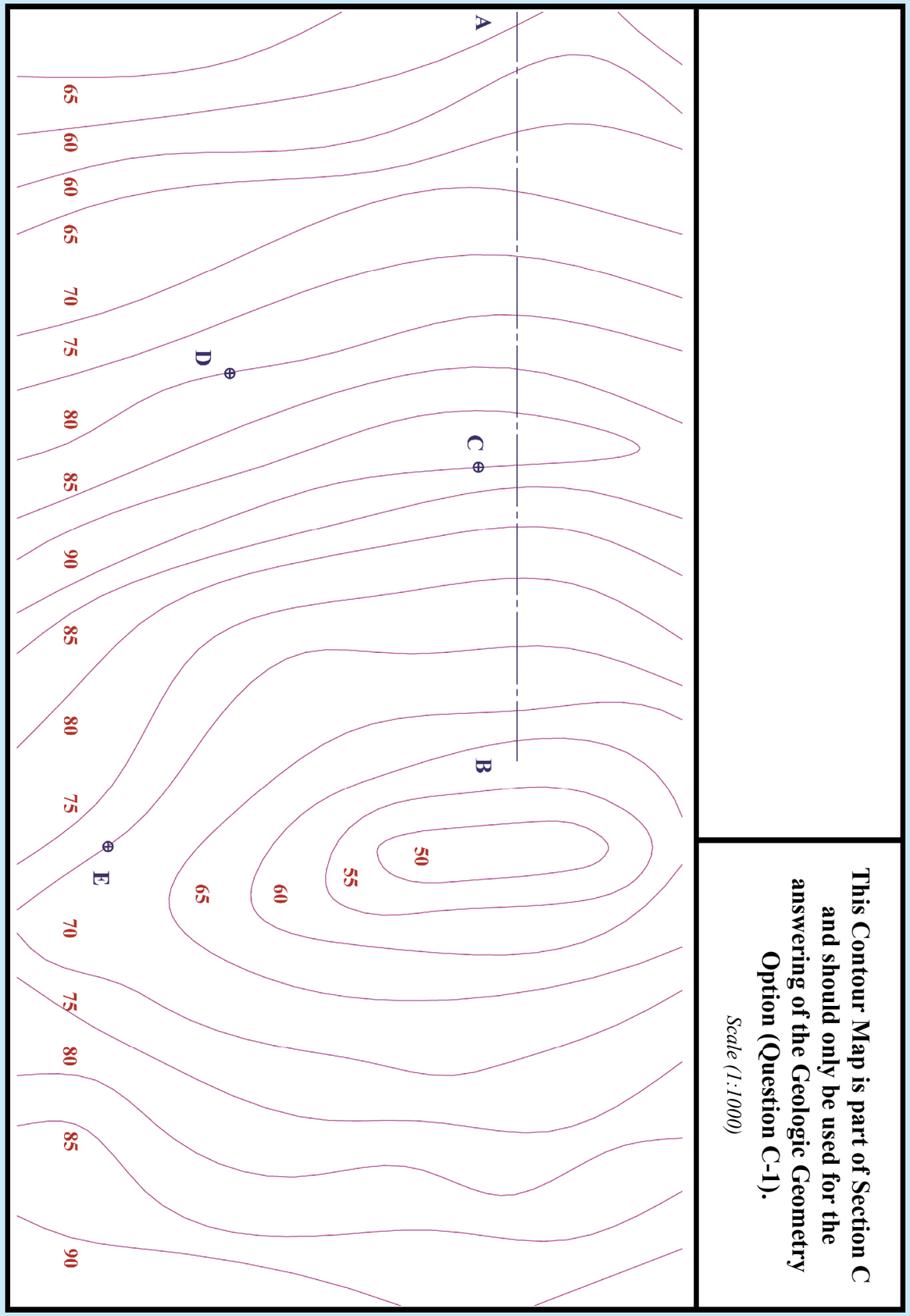

SECTION A - Core - Answer **any three** of the questions on this A3 sheet.

A-1. The 3D graphic below shows a rugby ball. The outline of the rugby ball is in the shape of an ellipse.

In the drawing on the right, **AB** is the major axis of the ellipse. The focal points are also shown.

(a) Locate the minor axis of the ellipse.

(b) Draw the ellipse.

A-2. The 3D graphic below shows a portion of a skyscraper.

A set of isometric axes and a partially completed outline drawing of the building are shown on the right. The elevation and incomplete plan of the building have been positioned relative to the axes as shown.

Complete the axonometric projection.

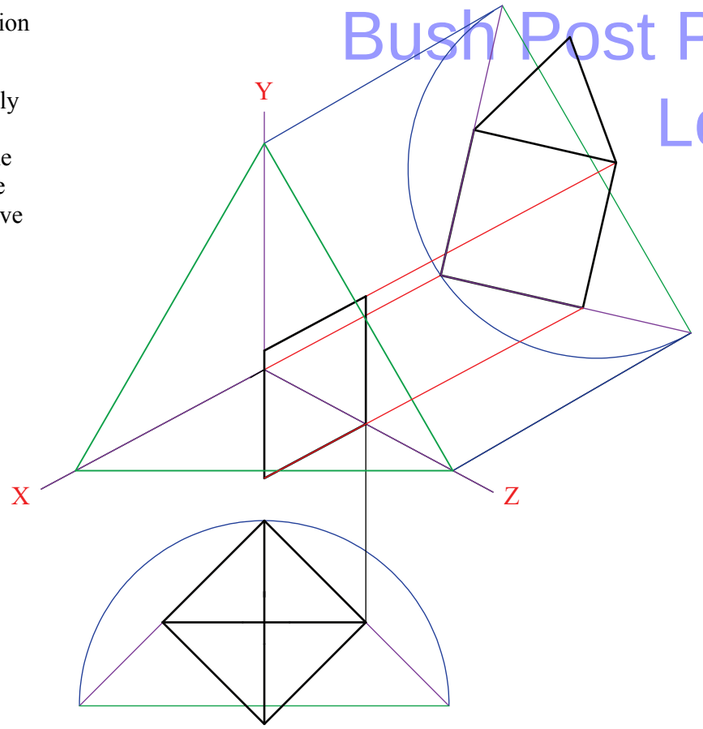

A-3. The 3D graphic below shows a jar of jam and a label which has been wrapped around it.

The drawing on the right shows the plan and elevation of the label and the cylindrical portion of the glass jar.

Complete the elevation showing the label in the wrapped position.

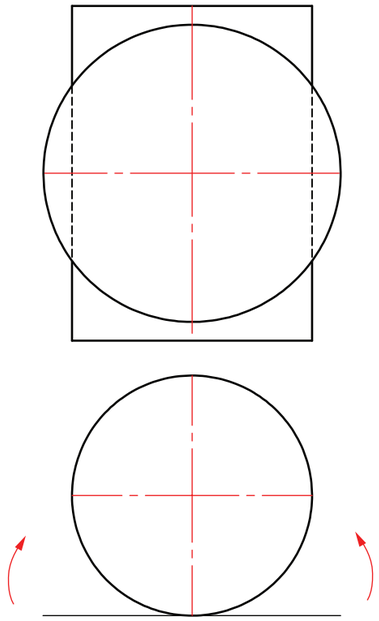

A-4. The 3D graphic below shows drinking glasses based on a cylinder and a truncated cone.

The drawing on the right shows the elevation and partially completed plan of the truncated cone **A** which is in contact with cylinder **B**.

(a) Draw the plan of the cylinder **B**.

(b) Draw the plan and elevation of the sphere **C** when it has been moved into position $\mathbf{C_1}$ and in contact with the given truncated cone **A** and cylinder **B**.

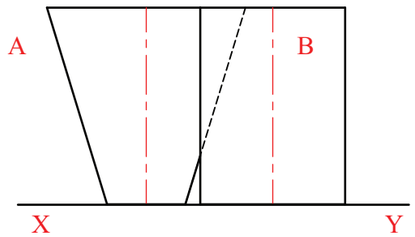

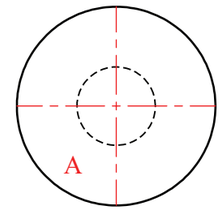

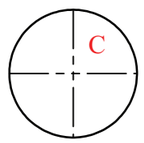

C_1

This examination paper must be returned at the end of the examination – You must include your Name, School Name and Teacher's Name on the front cover.

BLANK PAGE

Pre-Leaving Certificate Examination, 2017

Design & Communication Graphics
Ordinary Level
Sections B and C (180 marks)

Time: 3 Hours

This examination is divided into three sections:

SECTION A (Core - Short Questions)
SECTION B (Core - Long Questions)
SECTION C (Applied Graphics - Long Questions)

SECTION A
- Four questions are presented.
- Answer **any three** on the accompanying A3 examination paper.
- All questions in Section A carry **20 marks** each.

SECTION B
- Three questions are presented.
- Answer **any two** on drawing paper.
- All questions in Section B carry **45 marks** each.

SECTION C
- Five questions are presented.
- Answer **any two** (i.e. the options you have studied) on drawing paper.
- All questions in Section C carry **45 marks** each.

General Instructions:
- *Construction lines must be shown on all solutions.*
- *Write the question number distinctly on the answer paper in Sections B and C.*
- *Work on one side of the drawing paper only.*
- *All dimensions are given in metres or millimetres.*
- *Write your Name, School Name and Teacher's Name in the box provided on section A and on all other sheets used.*

SECTION B - Core

Answer **any two** questions from this section on drawing paper.

B-1. The 3D graphic on the right shows a model of a building. The main building intersects a central hall as shown. The cross section of the main building is shown on the left.

Fig B-1 below shows the plan and elevation of the building.

(a) Draw the given plan and elevation of the building and show all lines of interpenetration.

(b) Draw an end view of the building.

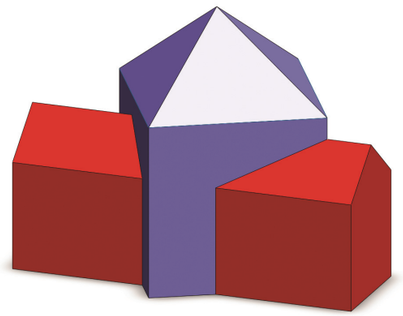

Scale 1:1

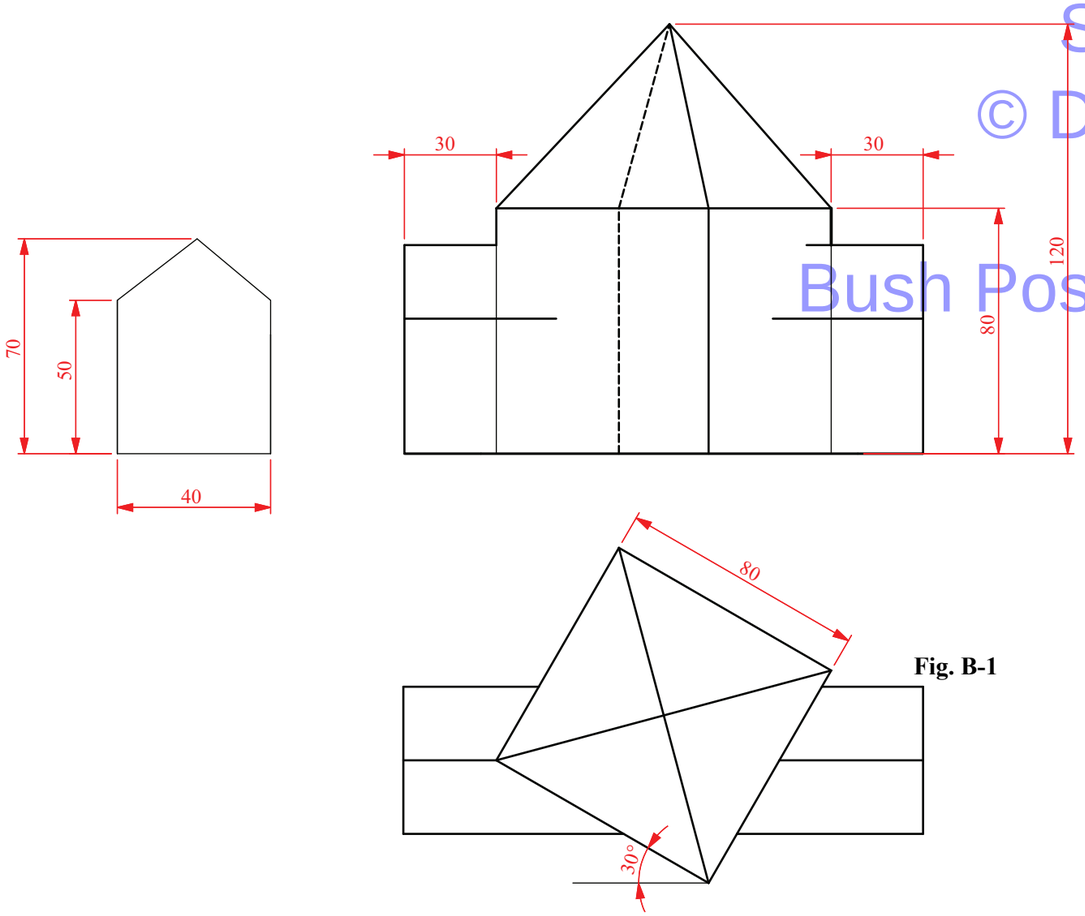

Fig. B-1

BLANK PAGE

BLANK PAGE

B-2. The 3D graphic on the right shows a doghouse.

Fig. B-2 below shows the plan and elevation of a similar doghouse.

(a) Draw the given plan.

(b) Make a perspective drawing of the model given the following:

- The spectator point **S** is 90mm from corner **A**
- The picture plane is touching corner **A**
- The horizon line is 100mm above the ground line.

Scale 1:1

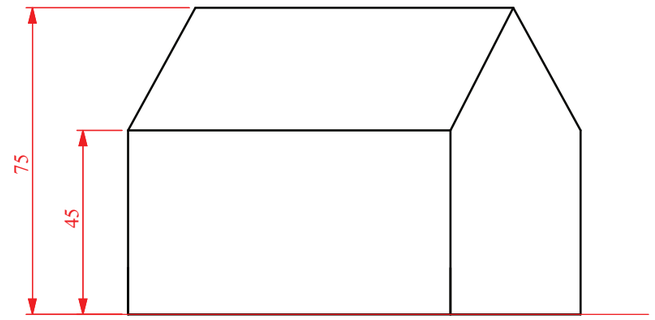

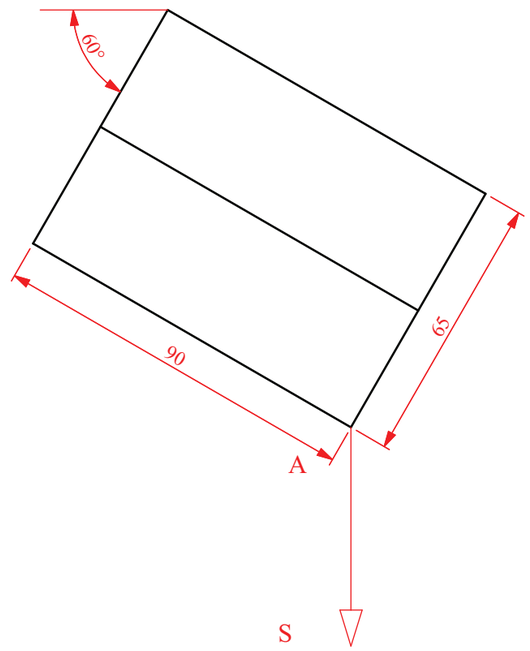

Fig. B-2

B-3. The 3D graphic on the right shows a cordless phone and base.

Fig. B-3 below shows an isometric view of a model of the phone base.

(a) Draw an elevation of the structure in the direction of the arrow.

(b) Project a plan from the elevation.

(c) Draw an auxiliary elevation of the ***structure***, projected from the plan, which will include the true shape of surface **A**.

Scale 1:1

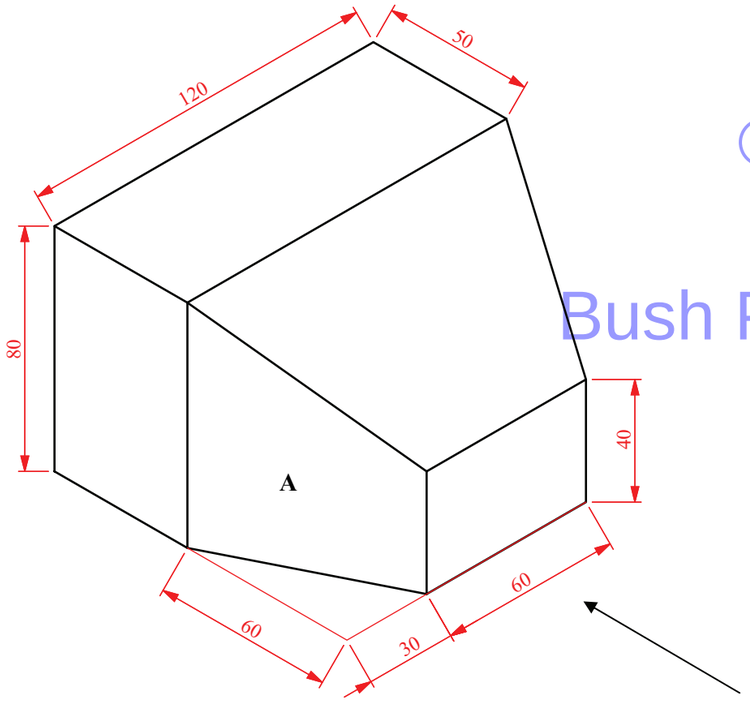

Fig. B-3

Assemblies

C-5. The 3D graphic on the right shows a table tennis table which has a clamp mechanism holding the net. Details of the clamp mechanism are given in Fig C-5 below.

A parts list, and a 3D graphic of the parts are also given.

Draw the sectional elevation of the clamp mechanism.

(Any omitted dimensions may be estimated.)

Scale 1:1

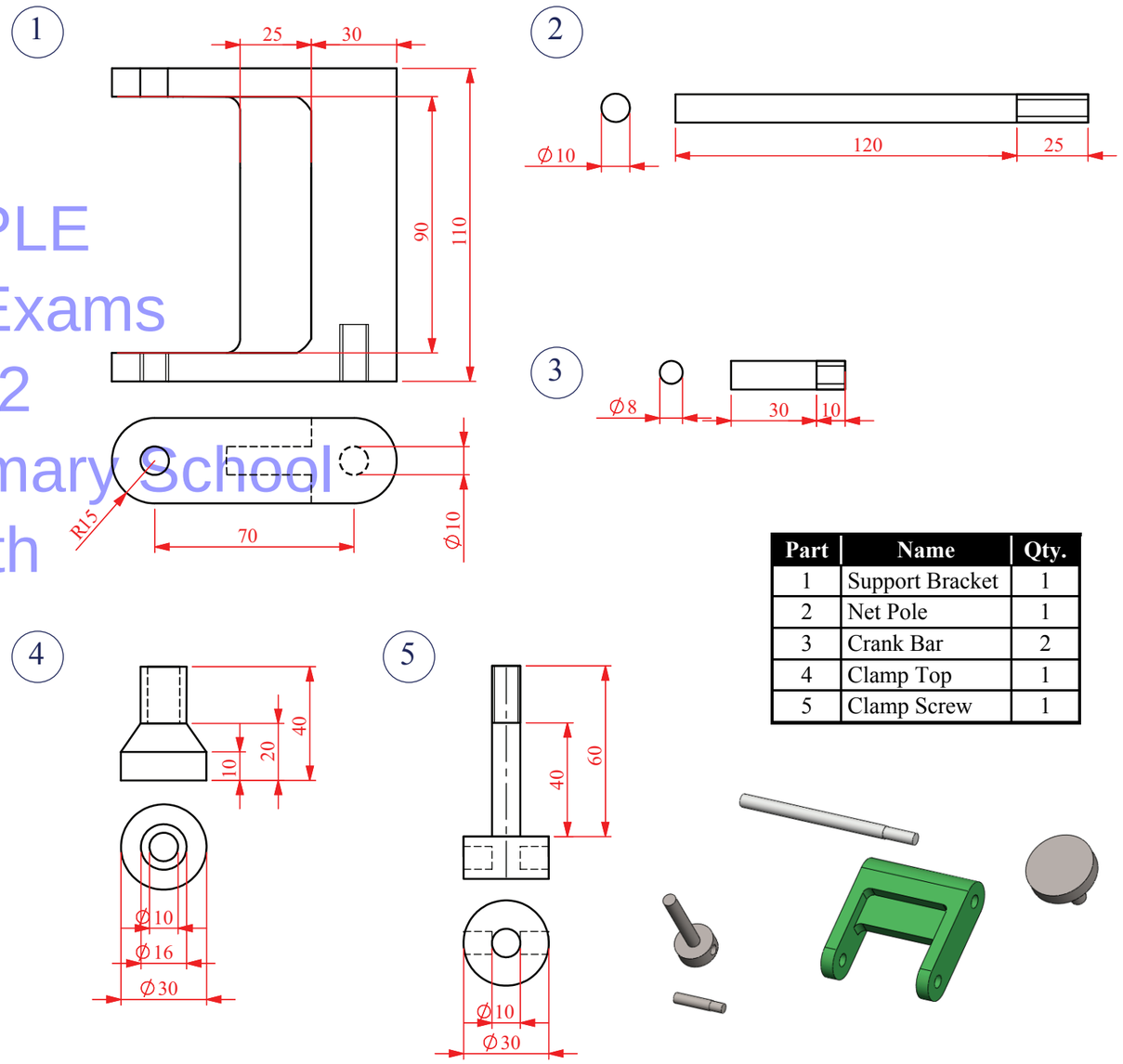

Part	Name	Qty.
1	Support Bracket	1
2	Net Pole	1
3	Crank Bar	2
4	Clamp Top	1
5	Clamp Screw	1

Fig. C-5

Dynamic Mechanisms

C-4. The image on the right shows a child's toy.

A cam mechanism is used inside the toy in order to move the caterpillar up and down as the handle is turned.

A cam imparts the following motion to an inline knife edge follower:

- 0° to 120° Rise 45mm with simple harmonic motion
- 120° to 210° Dwell
- 210° to 360° Fall 45mm with uniform velocity

(a) Draw the displacement diagram for the cam.

Note: *It is not necessary to draw the profile of the cam.*

(b) The image on the right shows a Segway Hoverboard.

In Fig. C-4 below, the circle **C** represents the wheel. In the diagram, circle **C** rolls clockwise along the line **AB** for one full revolution.

Plot the locus of point **P** for this movement.

Scale 1:1

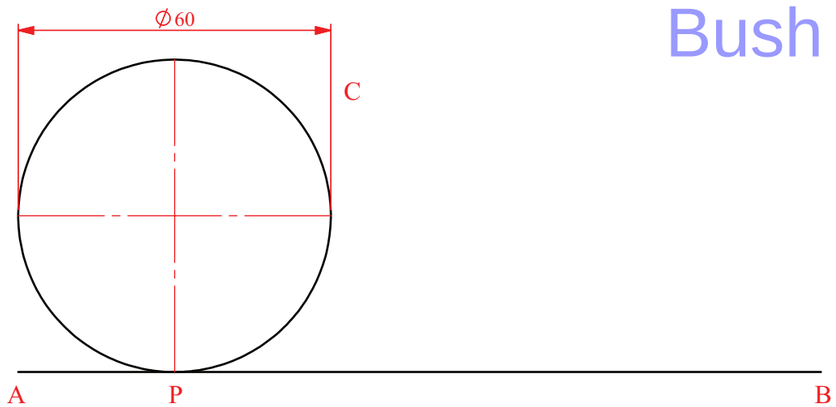

Fig. C-4

SECTION C - Applied Graphics

Answer **any two** questions (i.e. the options you have studied) from this section on drawing paper

Geologic Geometry

C-1. The accompanying map, located on the back page of Section A, shows ground contours at 5 metre vertical intervals.

(a) On the drawing supplied, draw a vertical section (profile) on the line **AB**.

(b) **C**, **D** and **E** are outcrop points on the top surface of a stratum of ore. Determine the strike and dip of the stratum.

(c) The stratum has a thickness of 15 metres. In your auxiliary view, which shows the dip, draw the bottom surface of the stratum.

Scale 1:1000

Structural Forms

C-2. The graphic on the right shows a church in Athy, Co. Kildare. The roof in the form of a hyperbolic paraboloid.

Fig. C-2 shows the elevation and plan of a hyperbolic paraboloid surface **ABCD**.

(a) Draw the given plan and elevation of the hyperbolic paraboloid surface.

(b) Project an end view of the hyperbolic paraboloid surface.

Scale 1:1

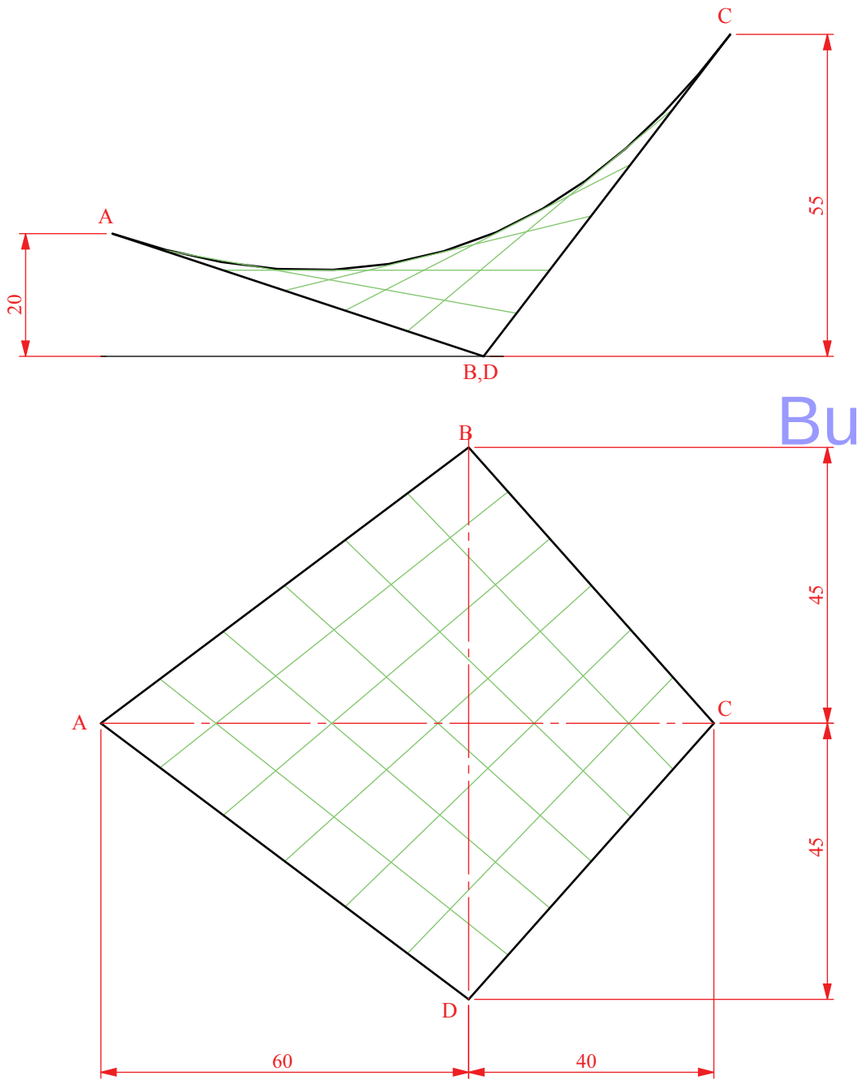

Fig. C-2

Surface Geometry

C-3. The 3D graphic on the right shows a leather handbag.

Fig. C-3 shows the plan and elevation of the handbag.

(a) Draw the given views.

(b) Draw a one-piece surface development of the handbag.

Ignore the handles of the handbag for the purposes of your drawing.

Scale 1:1

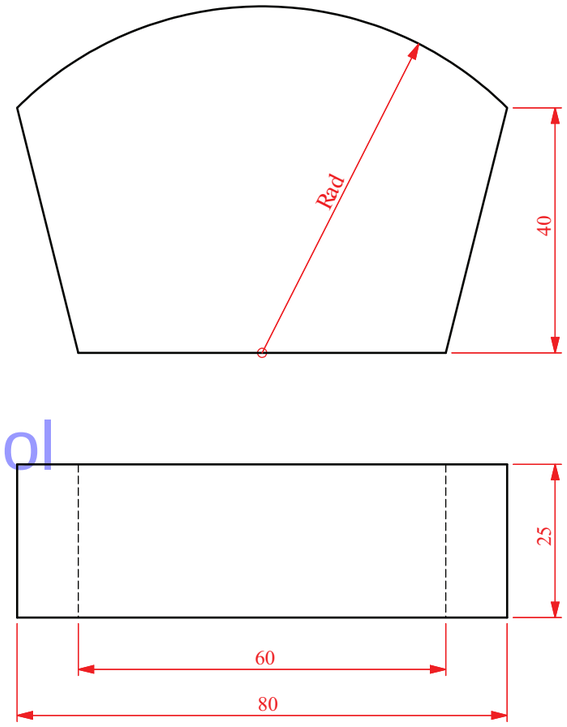

Fig. C-3