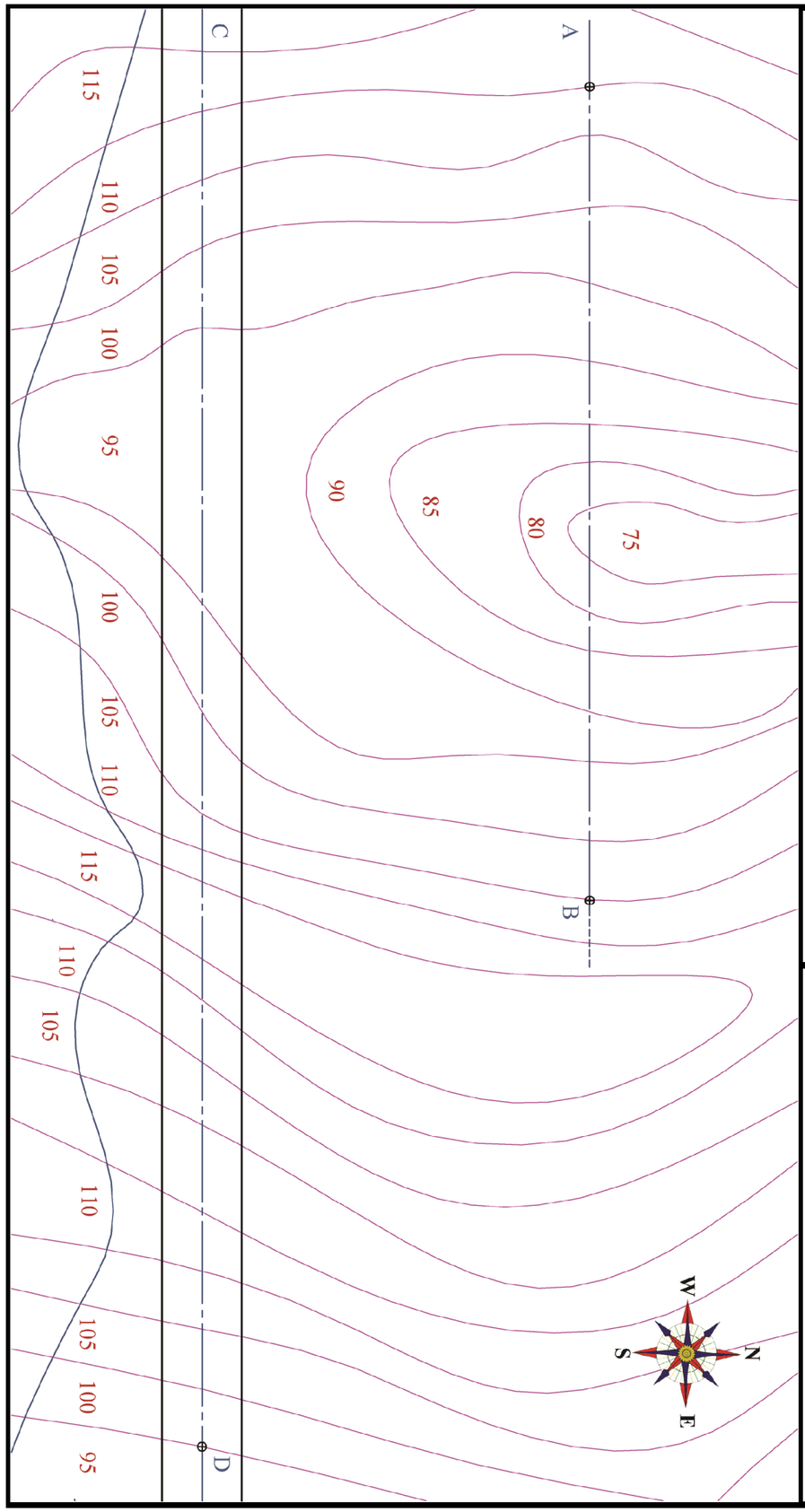

This Contour Map is part of Section C and should only be used for the answering of the Geologic Geometry Option (Question C-1).

Scale (1:1000)

Pre-Leaving Certificate Examination, 2019

Design & Communication Graphics

Ordinary Level

Section A (60 marks)

Time: 3 Hours

This examination is divided into three sections:

SECTION A	(Core - Short Questions)
SECTION B	(Core - Long Questions)
SECTION C	(Applied Graphics - Long Questions)

SECTION A
- Four questions are presented.
- Answer **any three** on the A3 sheet overleaf.
- All questions in Section A carry **20 marks** each.

SECTION B
- Three questions are presented.
- Answer **any two** on drawing paper.
- All questions in Section B carry **45 marks** each.

SECTION C
- Five questions are presented.
- Answer **any two** (i.e. the options you have studied) on drawing paper.
- All questions in Section C carry **45 marks** each.

General Instructions:
- *Construction lines must be shown on all solutions.*
- *Write the question number distinctly on the answer paper in Sections B and C.*
- *Work on one side of the drawing paper only.*
- *All dimensions are given in metres or millimetres.*
- *Write your Name, School Name and Teacher's Name in the box below and on all other sheets used.*

Name:

School Name:

Teacher's Name:

SECTION A - Core - Answer **any three** of the questions on this A3 sheet.

A-1. The image shows a set of patio furniture. The top of the table is an ellipse and it has a circular centre piece.

The drawing on the right shows a partially completed ellipse with the completed centre circle.

(a) Locate additional points on the curve and draw the ellipse.

(b) Locate the focal points of the ellipse.

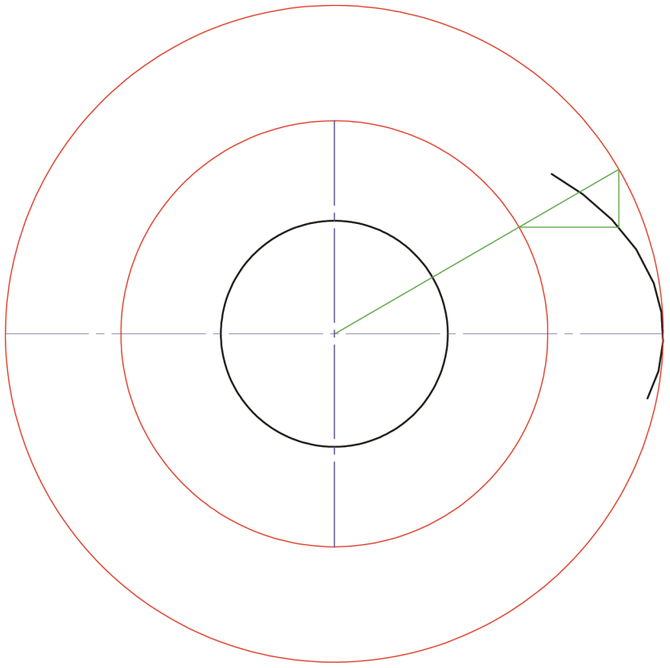

A-2. The image below shows educational toys which are used in a crèche. They are based on geometric solids and variations of same.

The drawing on the right shows the elevation and partially completed plan of a truncated sphere **A**, a cone **B** and a cylinder **C**. The solids are in mutual contact.

(a) Draw the plan of the cone **B**.

(b) Draw the plan of the cylinder **C**.

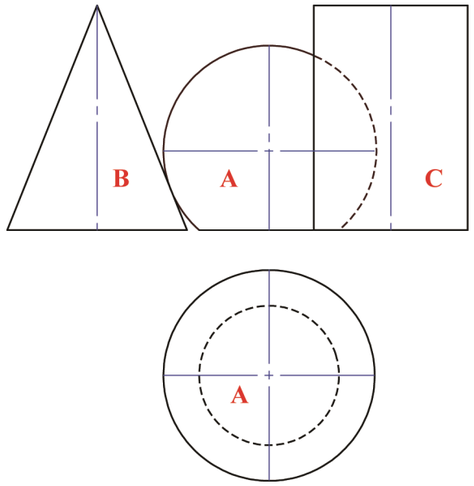

A-3. The image below shows a coal bunker.

The drawing on the right shows the plan and partially completed perspective view of the coal bunker with the lid in a closed position.

Complete the perspective drawing of the coal bunker.

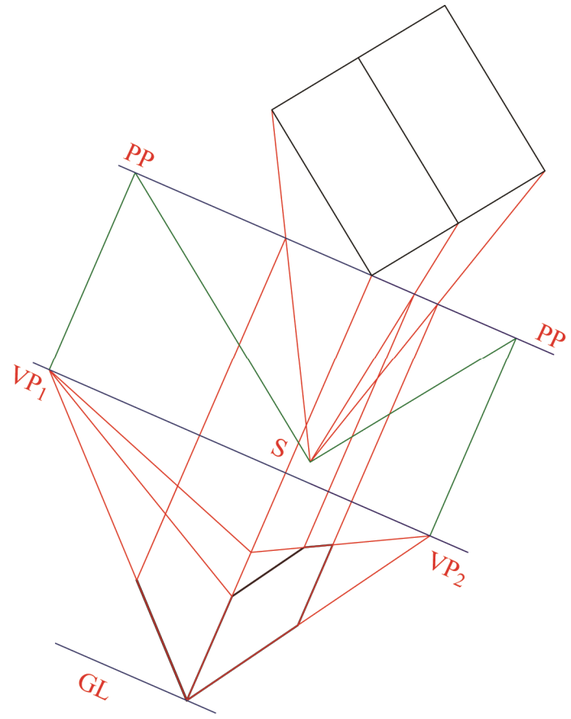

A-4. The image below shows a marquee.
The incomplete plan and incomplete elevation of the marquee are shown on the right.
A completed auxiliary elevation of the marquee is also shown.

(a) Complete the plan of the marquee.

(b) Complete the elevation.

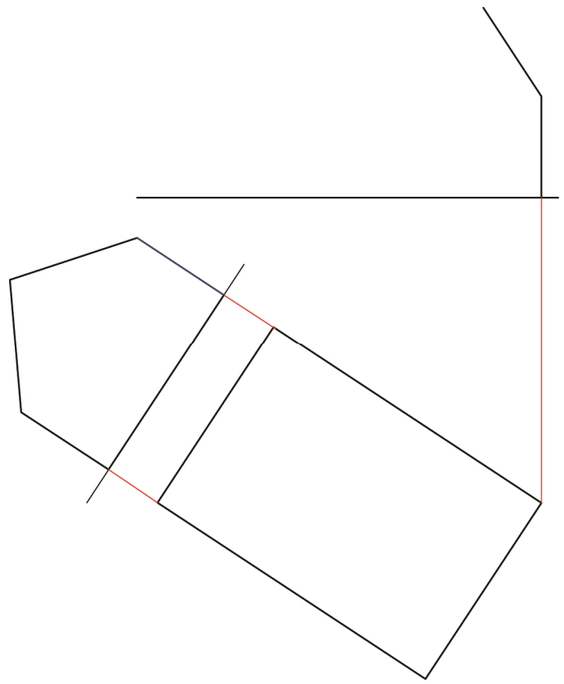

This examination paper must be returned at the end of the examination – You must include your Name, School Name and Teacher's Name on the front cover.

Pre-Leaving Certificate Examination, 2019

Design & Communication Graphics
Ordinary Level
Sections B and C (180 marks)

Time: 3 Hours

This examination is divided into three sections:

SECTION A	(Core - Short Questions)
SECTION B	(Core - Long Questions)
SECTION C	(Applied Graphics - Long Questions)

SECTION A
- Four questions are presented.
- Answer **any three** on the accompanying A3 examination paper.
- All questions in Section A carry **20 marks** each.

SECTION B
- Three questions are presented.
- Answer **any two** on drawing paper.
- All questions in Section B carry **45 marks** each.

SECTION C
- Five questions are presented.
- Answer **any two** (i.e. the options you have studied) on drawing paper.
- All questions in Section C carry **45 marks** each.

General Instructions:
- *Construction lines must be shown on all solutions.*
- *Write the question number distinctly on the answer paper in Sections B and C.*
- *Work on one side of the drawing paper only.*
- *All dimensions are given in metres or millimetres.*
- *Write your Name, School Name and Teacher's Name in the box provided on section A and on all other sheets used.*

SECTION B - Core

Answer **any two** questions from this section on drawing paper.

B-1. The graphic on the right shows a birdhouse.

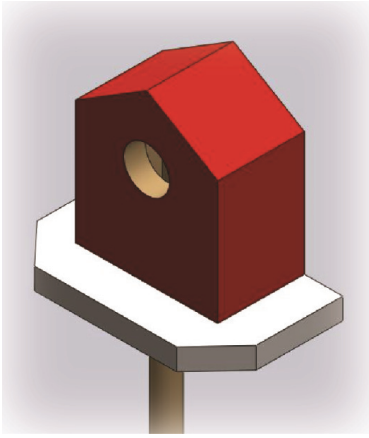

Fig. B-1 below shows an isometric view of a similar birdhouse.

(a) Draw the elevation of the birdhouse looking in the direction of the arrow.

(b) Project a plan from the elevation.

(c) Draw an auxiliary elevation of the birdhouse projected from the plan, which will include the true shape of surface **A**.

*(**Note:** The circular hole is not to be drawn in any view.)*

Scale 1:1

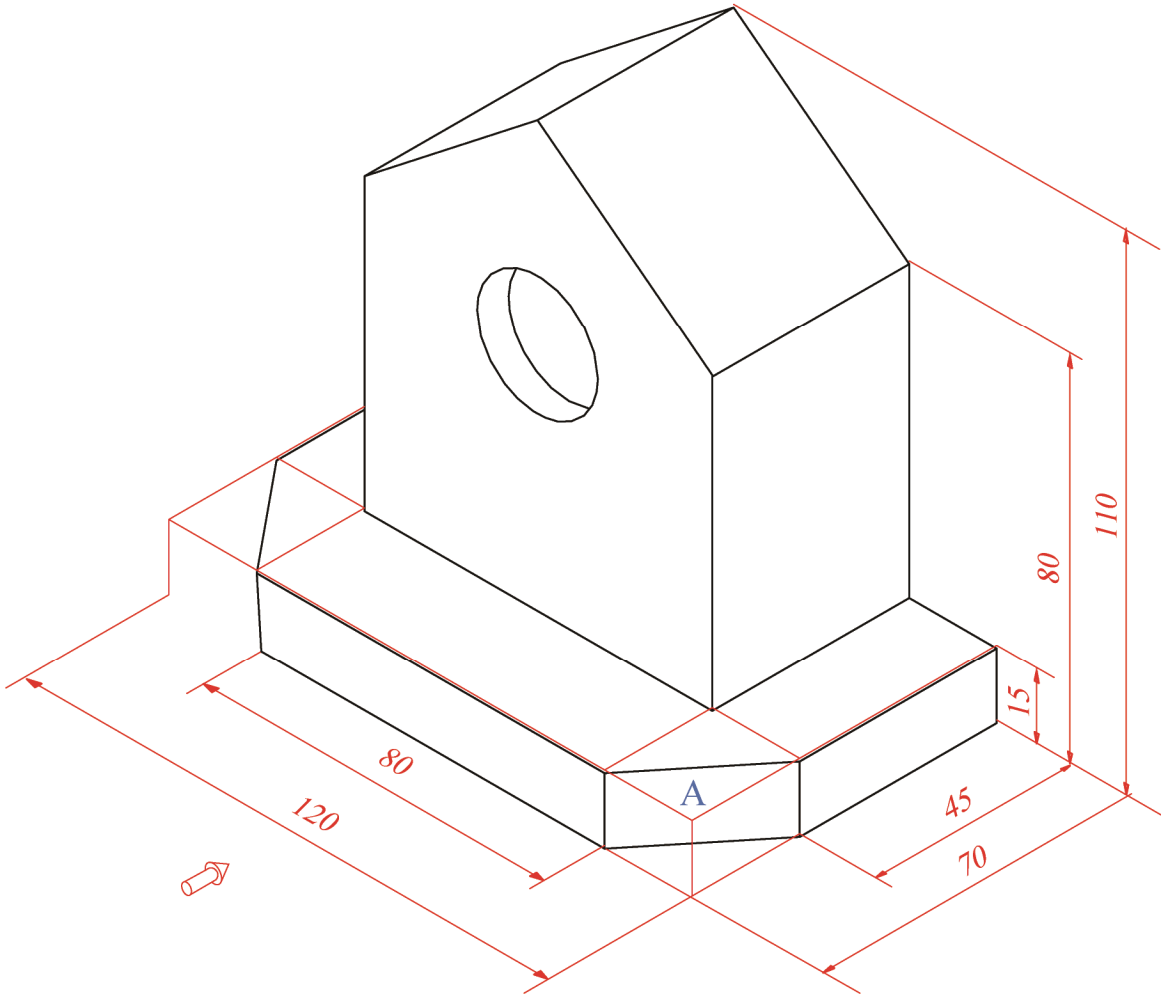

Fig. B-1

B-2. The graphic on the right shows a trophy.

Fig. B-2 shows an incomplete isometric projection of a similar trophy.

The elevation and plan of the trophy are also shown in the required positions.

(a) Draw the given equilateral triangle **abc** and the axonometric axes **X**, **Y** and **Z**.

(b) Draw the elevation and plan positioned as shown.

(c) Draw the axonometric projection of the main body of the trophy.

(d) Draw the axonometric projection of the circular portion of the trophy.

Scale 1:1

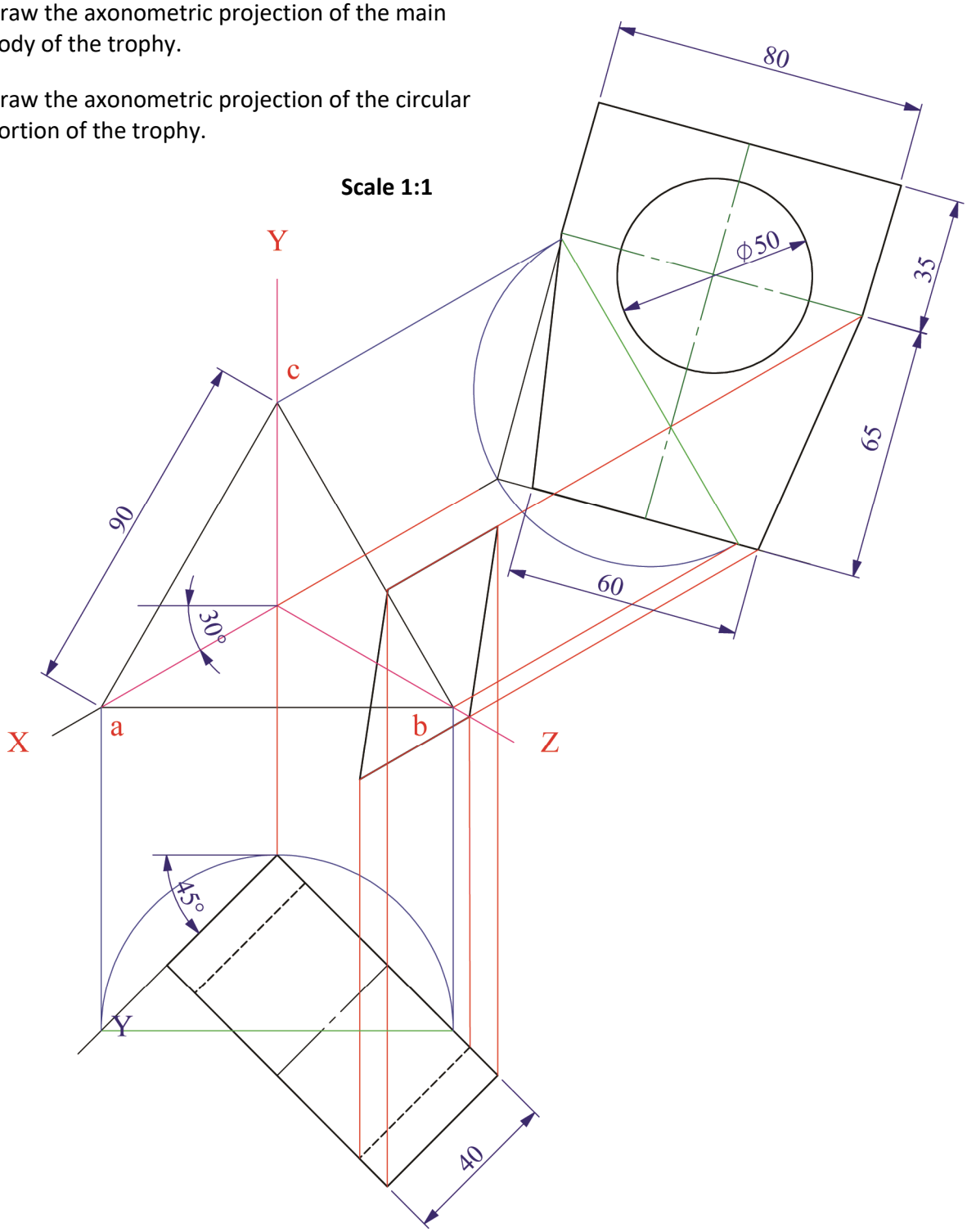

Fig. B-2

B-3. The image on the right shows a child's playcentre. It consists of four entrance tunnels leading to a central area which is square in plan.

Fig. B-3 below shows the plan and elevation of a similar structure. A section through one of the entrance tunnels is also shown.

(a) Draw the given plan and elevation of the structure and show all lines of interpenetration.

(b) Draw an end view of the ***structure***.

Scale 1:1

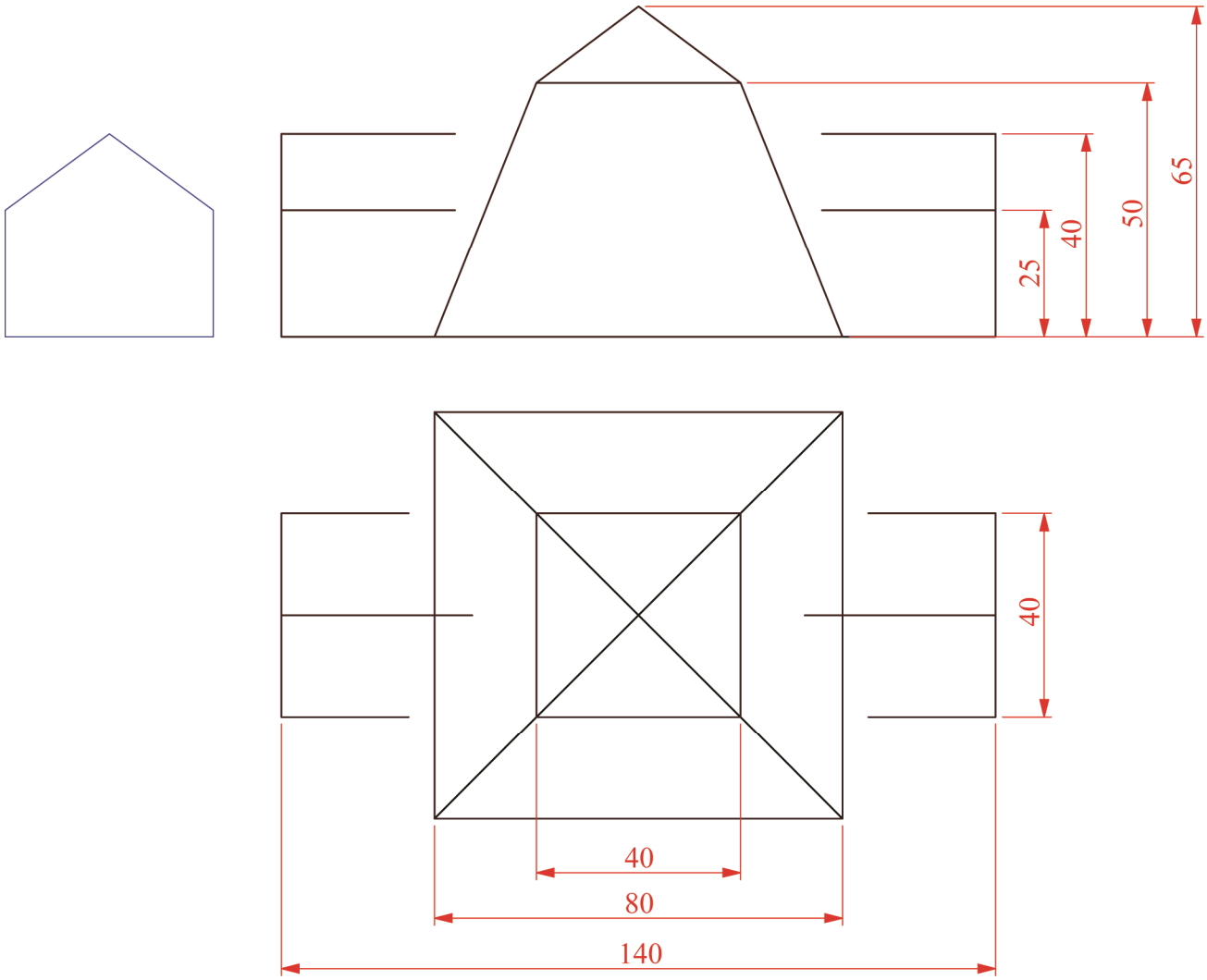

Fig. B-3

SECTION C - Applied Graphics

Answer **any two** questions (i.e. the options you have studied) from this section on drawing paper.

Geologic Geometry

C-1. The accompanying map, located on the back page of Section A, shows ground contours at five metre vertical intervals.

(a) On the drawing supplied, draw a vertical section (profile) on the line **AB**.

(b) The area to the north of the road is to be used as a storage facility for materials and equipment during the construction of the road. To create a suitable surface, filling was placed on the ground to create a horizontal surface. Draw a line on the profile to indicate the top surface of the road when the filling is 15 metres in depth along the line of the profile.

(c) **CD** is the centreline of a proposed roadway which is level at an altitude of 120m. Using side slopes of 1:1 for the embankments, complete the earthworks on the northern side, which are necessary to accommodate the roadway.

*(**Note**: The earthworks on the southern side of the roadway have already been completed.)*

Scale 1:1000

Structural Forms

C-2. A photograph of a church which is in the form of a hyperboloid of revolution is shown.

Fig. C-2 below shows the plan and elevation of a of a similar structure.

(a) Draw the given plan.

(b) Project an elevation of the building.

Scale 1:400

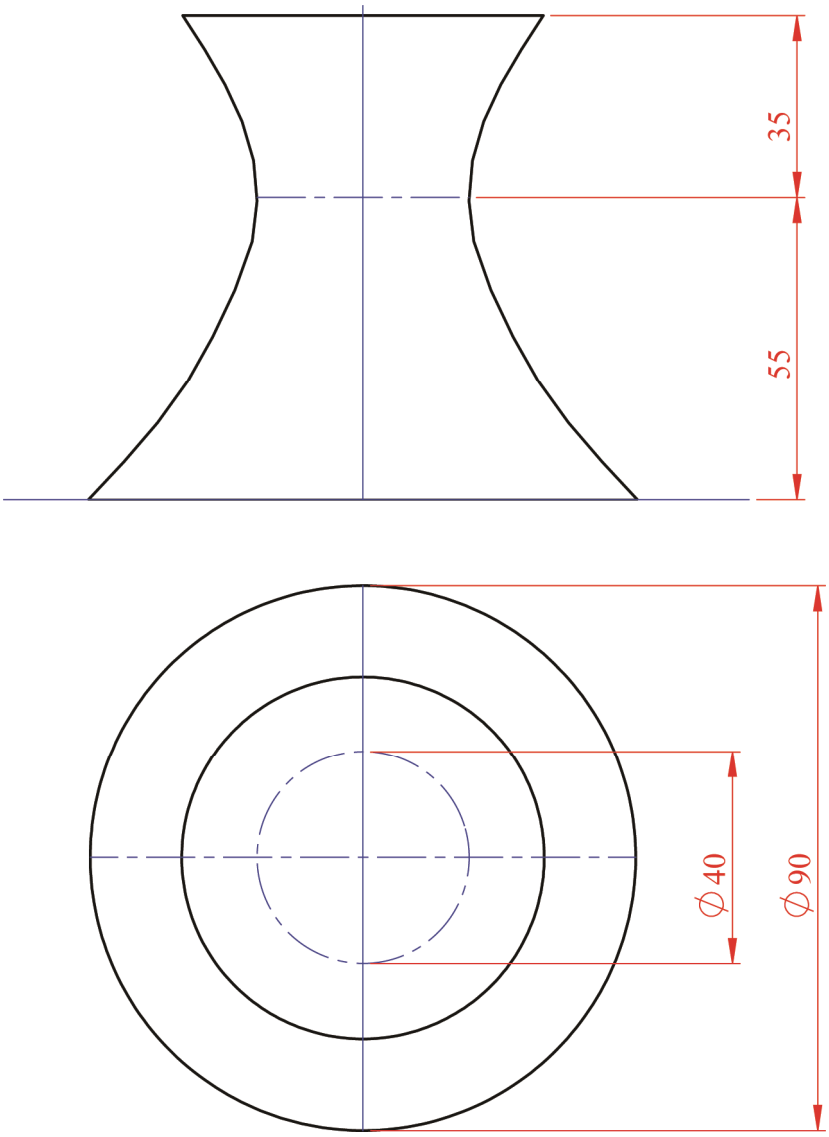

Fig. C-2

Surface Geometry

C-3. The graphic on the right shows a number of sweet boxes.

The elevation and end view of a similar box are shown in Fig. C-3 below.

(a) Draw the given views of the box.

(b) Project a plan of the box.

(c) Draw a one-piece surface development of the box.

Scale 1:1

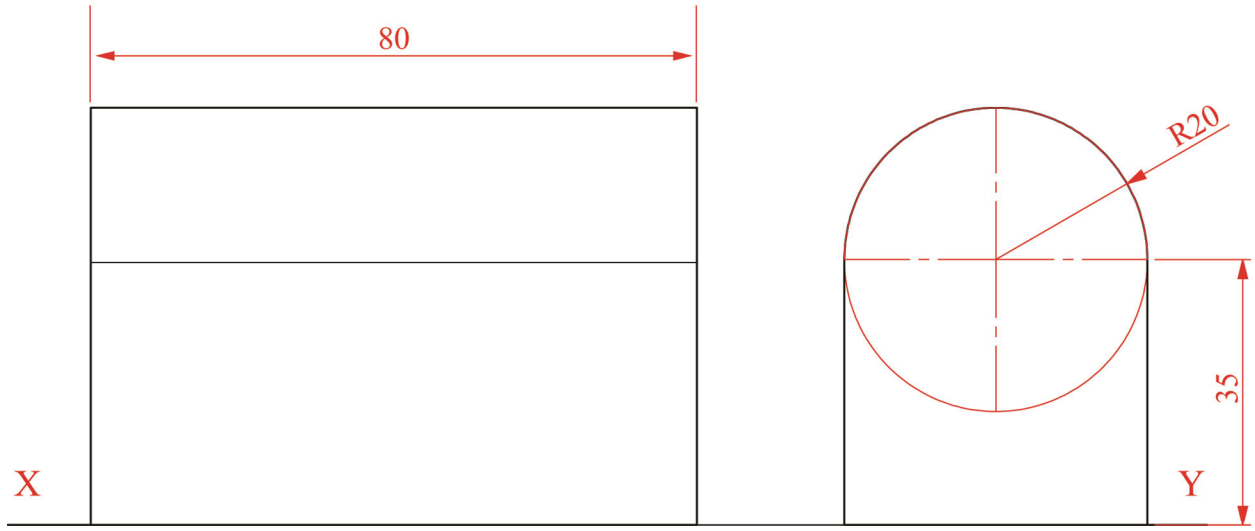

Fig. C-3

Dynamic Mechanisms

C-4. The photograph on the right shows a toy train.
A cam and in-line knife-edge follower are used inside the toy to move the chimney up and down as the toy rolls.

The cam has a minimum radius of 35mm and a camshaft diameter of 20mm and rotates in an anti-clockwise direction.

The cam imparts the following motion to the follower:

- 0° to 120° Rise 70mm with simple harmonic motion
- 120° to 210° Dwell
- 210° to 360° Fall 75mm with uniform velocity

(a) Draw the displacement diagram for the cam.

(In the displacement diagram, use a distance of 15mm to represent each 30° interval.)
*(**Note:** It is not necessary to draw the cam profile.)*

(b) The graphic on the right shows a piston and crank mechanism from the engine of a train.

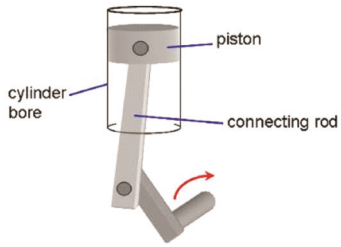

Fig C-4 (b) below shows the line diagram for the mechanism. The crank **OC** and the arm **AC** are pin jointed at **C**. Point **B** is located on the arm **AC** as shown.

The crank **OC** rotates in a clockwise direction, for one revolution, while **A** moves along the vertical axis.

Plot the locus for **B** for this movement.

Scale 1:1

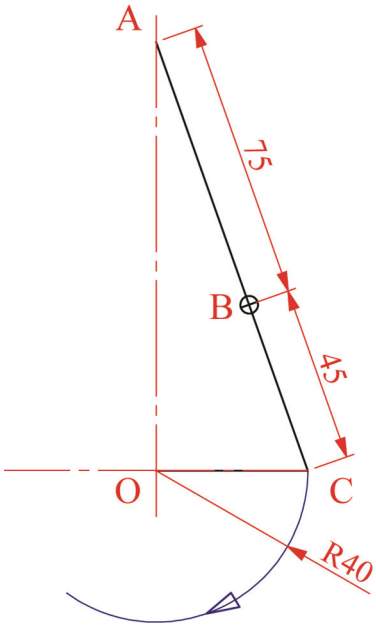

Fig. C-4 (b)

Assemblies

C-5. Details of a display table are given in Fig. C-5.

A parts list and a 2D graphic of the parts are also shown.

Draw the ***sectional elevation* A-A** of the assembled table.

(Any omitted dimensions may be estimated.)

Part	Name	Qty.
1	Trunk	1
2	Leg	4
3	Leg Support	1
4	Table Top	1

Scale 1:1

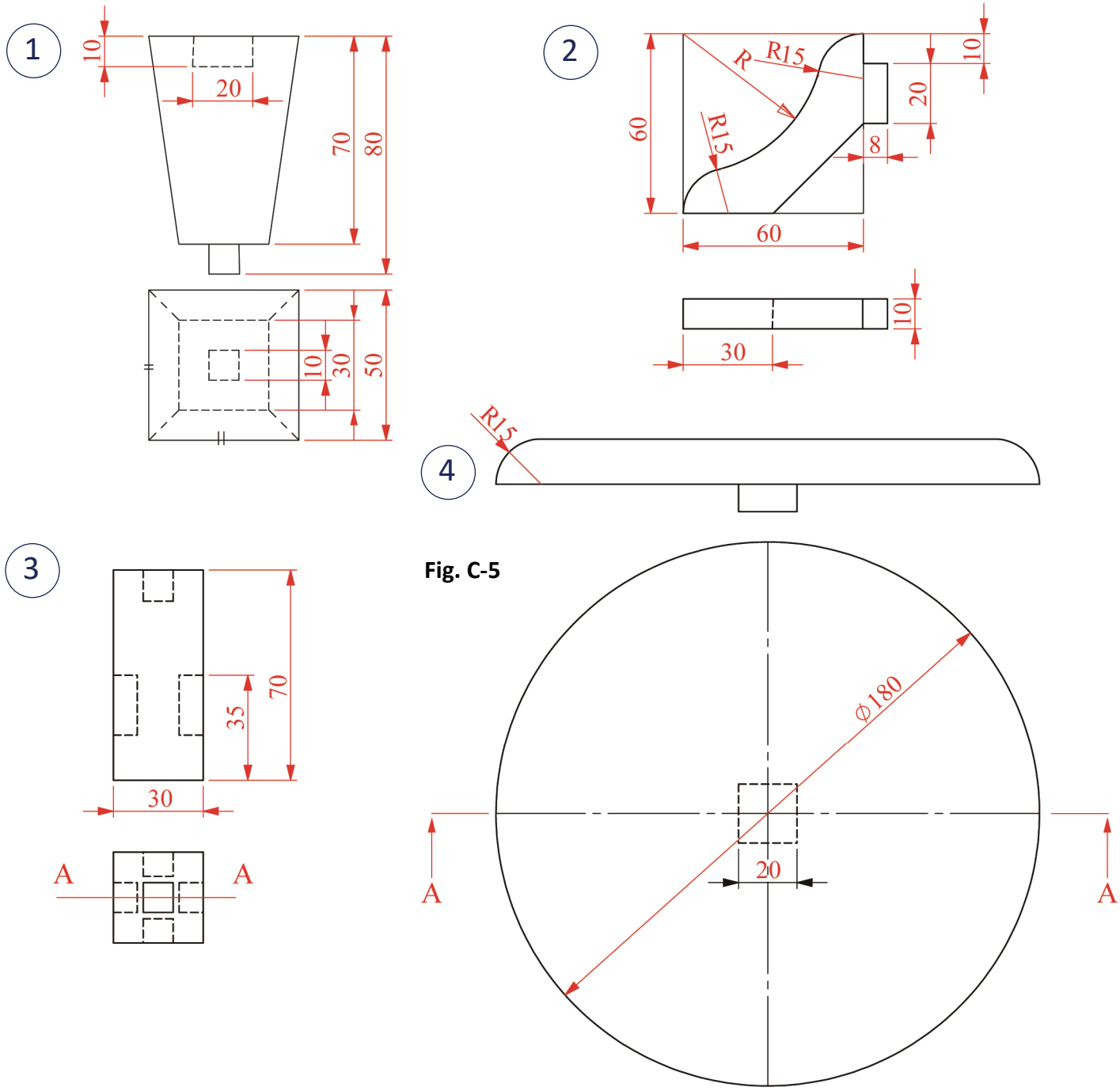

Fig. C-5

There is no examination material on this page

There is no examination material on this page

There is no examination material on this page