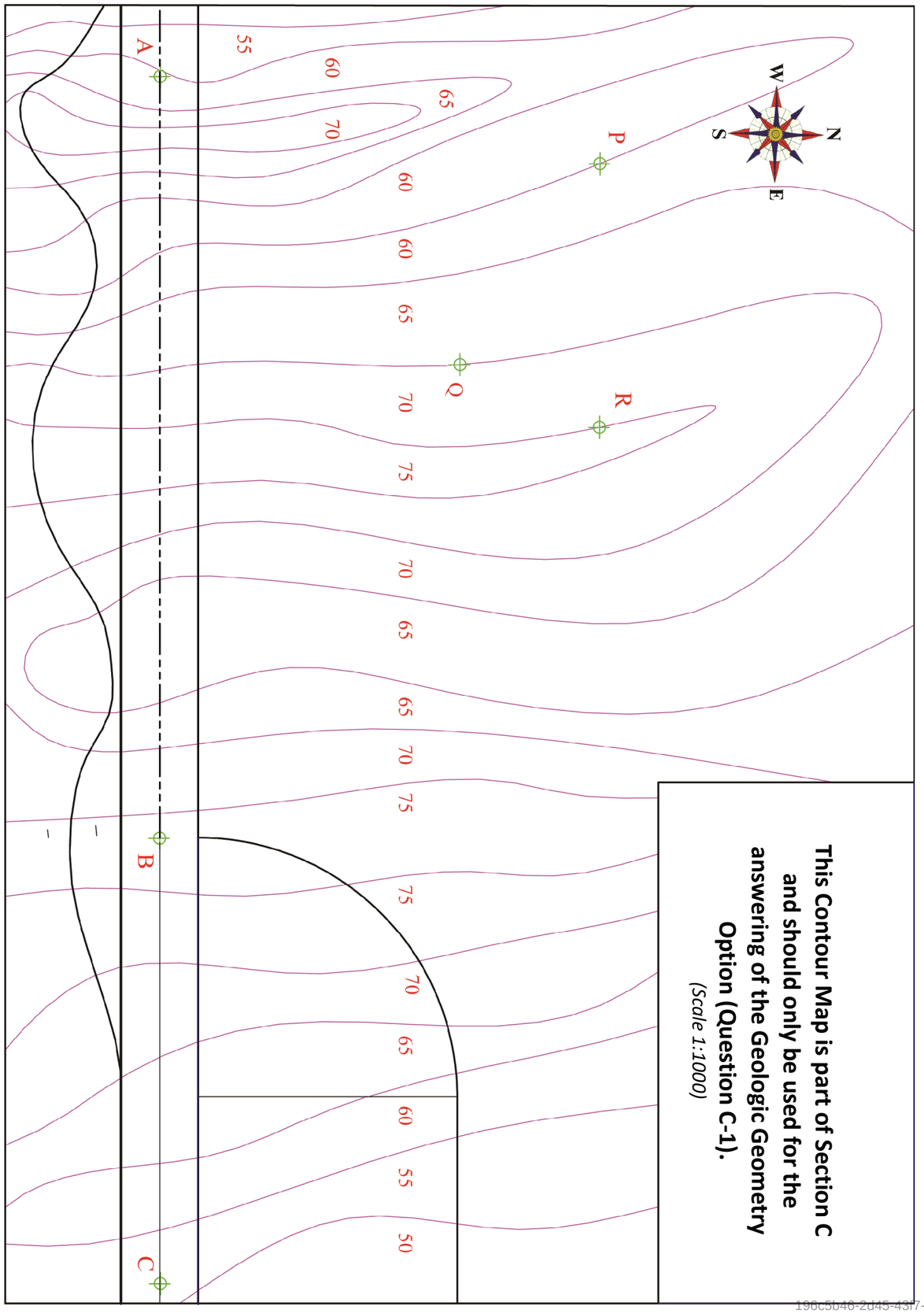

This Contour Map is part of Section C and should only be used for the answering of the Geologic Geometry Option (Question C-1).

(Scale 1:1000)

Pre-Leaving Certificate Examination, 2019

Design & Communication Graphics

Higher Level

Section A (60 marks)

Time: 3 Hours

This examination is divided into three sections:

SECTION A	(Core - Short Questions)
SECTION B	(Core - Long Questions)
SECTION C	(Applied Graphics - Long Questions)

SECTION A
- Four questions are presented.
- Answer **any three** on the A3 sheet overleaf.
- All questions in Section A carry **20 marks** each.

SECTION B
- Three questions are presented.
- Answer **any two** on drawing paper.
- All questions in Section B carry **45 marks** each.

SECTION C
- Five questions are presented.
- Answer **any two** (i.e. the options you have studied) on drawing paper.
- All questions in Section C carry **45 marks** each.

General Instructions:
- *Construction lines must be shown on all solutions.*
- *Write the question number distinctly on the answer paper in Sections B and C.*
- *Work on one side of the drawing paper only.*
- *All dimensions are given in metres or millimetres.*
- *Write your Name, School's Name and Teacher's Name in the box below and on all other sheets used.*

Name:

School Name:

Teacher's Name:

SECTION A - Core - Answer **any three** of the questions on this A3 sheet.

A-1. The graphic below shows a number of plant pots.

The drawing on the right shows the plan and elevation of one of the plant pots.

(a) Determine the true length of the line of intersection between the internal surfaces **A** and **B**.

(b) Determine the dihedral angle between surfaces **A** and **B**.

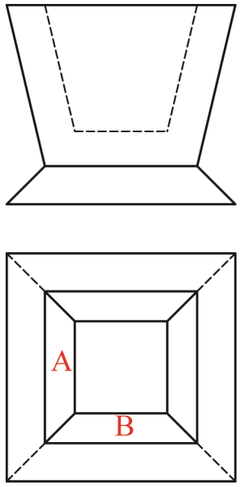

A-2. The graphic below shows a living room in a modern house. A two-sided fireplace is in the centre of the room as shown. The drawing on the right shows an incomplete trimetric projection of a similar two-sided fireplace using the axonometric axes method.

(a) Complete the axonometric projection of the fireplace.

(b) Determine the true shape of the rectangular sloping top surface of the structure.

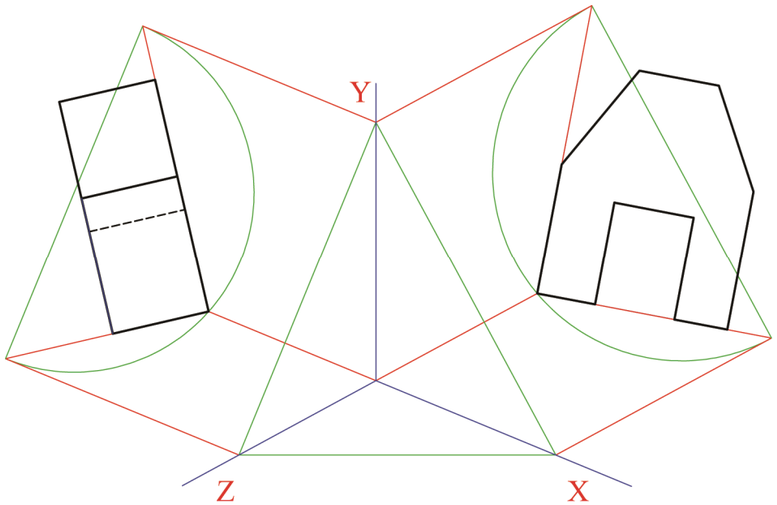

A-3. The graphic below shows a solar panel which is on the roof of a residential building.

The drawing on the right shows the plan of the sloping rectangular surface **abcd** and the elevation of the line **ab** of the incompleted surface.

The surface **abcd** is inclined at 50° to the horizontal plane.

(a) Find the altitude of the line **cd**.

(b) Draw the elevation of the surface **abcd**.

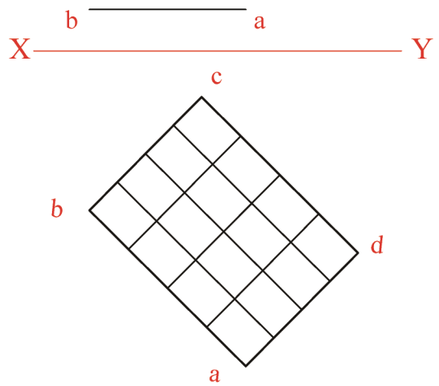

A-4. The graphic below shows a necklace with a pendant.

The pendant is in the form of an octahedron and consists of eight equilateral triangles.

The drawing on the right shows the plan of a similar octahedron which is orientated as shown.

(a) Find the altitude of the octahedron and project its elevation.

(b) Draw an elevation of the octahedron when one of its equilateral triangular surfaces is in a horizontal position.

(c) Project its plan.

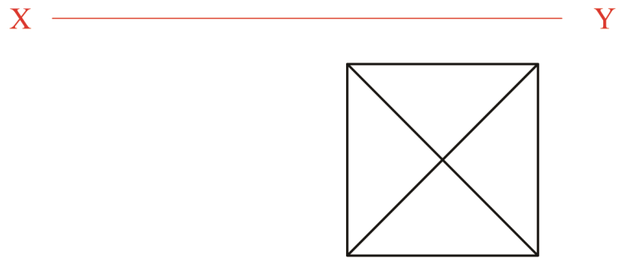

This examination paper must be returned at the end of the examination – You must include your Name, School Name and Teacher's Name on the front cover.

Pre-Leaving Certificate Examination, 2019

Design & Communication Graphics
Higher Level
Sections B and C (180 marks)

Time: 3 Hours

This examination is divided into three sections:

SECTION A	(Core - Short Questions)
SECTION B	(Core - Long Questions)
SECTION C	(Applied Graphics - Long Questions)

SECTION A
- Four questions are presented.
- Answer **any three** on the accompanying A3 examination paper.
- All questions in Section A carry **20 marks** each.

SECTION B
- Three questions are presented.
- Answer **any two** on drawing paper.
- All questions in Section B carry **45 marks** each.

SECTION C
- Five questions are presented.
- Answer **any two** (i.e. the options you have studied) on drawing paper.
- All questions in Section C carry **45 marks** each.

General Instructions:
- *Construction lines must be shown on all solutions.*
- *Write the question number distinctly on the answer paper in Sections B and C.*
- *Work on one side of the drawing paper only.*
- *All dimensions are given in metres or millimetres.*
- *Write your Name, School Name and Teacher's Name in the box provided on section A and on all other sheets used.*

SECTION B - Core

Answer **any two** questions from this section on drawing paper.

B-1. The image on the right shows a modern building which forms part of the University of Bangkok.

It comprises a series of planar surfaces.

Fig. B-1 shows the plan and elevation of three such intersecting surfaces.

The incomplete horizontal and vertical co-ordinates for points **A**, **B**, **C**, **D**, **E**, **F** and **G**, defining the four planes, are also given.

Scale 1:1

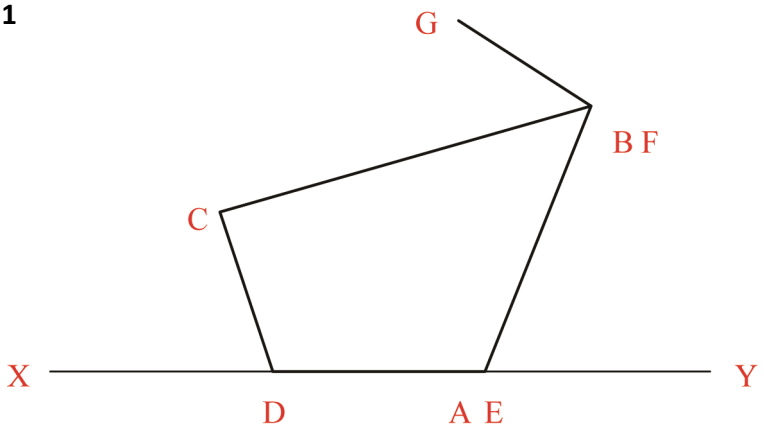

A:	130	---	0	---	85
B:	150	---	50	---	110
C:	80	---	30	---	?
D:	90	---	0	---	75
E:	130	---	0	---	55
F:	150	---	50	---	30
G:	125	---	?	---	70

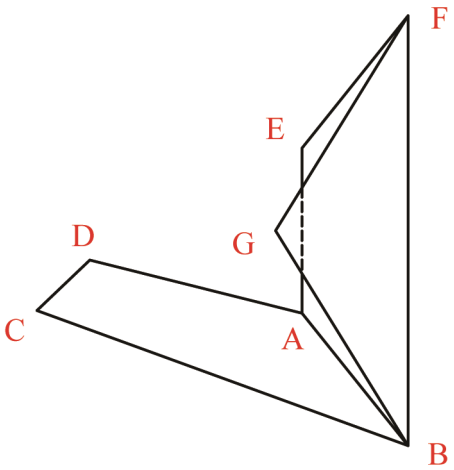

Fig. B-1

(a) Draw the given plan and elevation of the intersecting planes **ABCD** and **ABFE**.

(b) Determine the dihedral angle between the planes **ABCD** and **ABFE**.

(c) The triangle **BFG** is isosceles with a perimeter of 180mm. Complete the elevation and plan.

(d) Determine the projections of the line of intersection between the planes **ABCD** and **BFG**.

B-2. The image on the right shows an exhibition centre.

The outline projections of a similar structure are shown in Fig. B-2 below.

The curve in the elevation is a parabola, as indicated by the curve **ABC**, where **B** is the vertex of the parabola.

The structure is cut and shaped by a plane surface, which is inclined at 60° to the horizontal plane, as shown in the end view.

(a) Draw the given elevation and end view of the structure.

(b) Project a plan of the structure.

The front of the exhibition centre is composed of a series of glass panels. The end view in Fig. B-2 shows a proposed window which is to be placed on both sides of the structure.

(c) Draw the projections of both proposed windows in plan.

(d) Show the vertical and horizontal traces of the cutting plane which shapes the front of the solid.

Scale 1:100

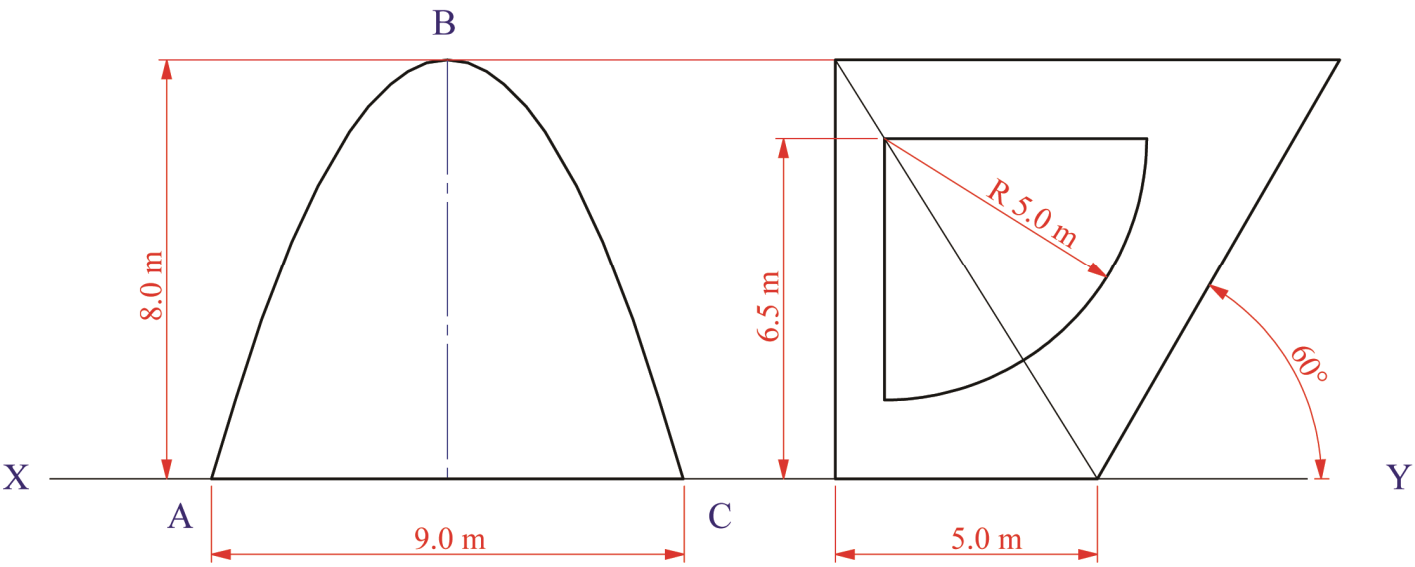

Fig. B-2

B-3. The image on the right shows a dog house.

Fig. B-3 shows the plan and elevation of a similar structure.

(a) Draw the given plan and make a perspective drawing of the structure, given the following:

- The spectator point, **S**, is 1m from corner **A**
- The picture plane is passing through corner **A**
- The horizon line is 0.6m above the ground line.

Use auxiliary vanishing points where appropriate.
Note: The entrance to the dog house is not required to be shown in the perspective drawing.

(b) Determine and indicate in millimetres the altitude of the dog house in the perspective drawing if the inclination of the sloping roof surfaces is changed to 45°.

Scale 1:10

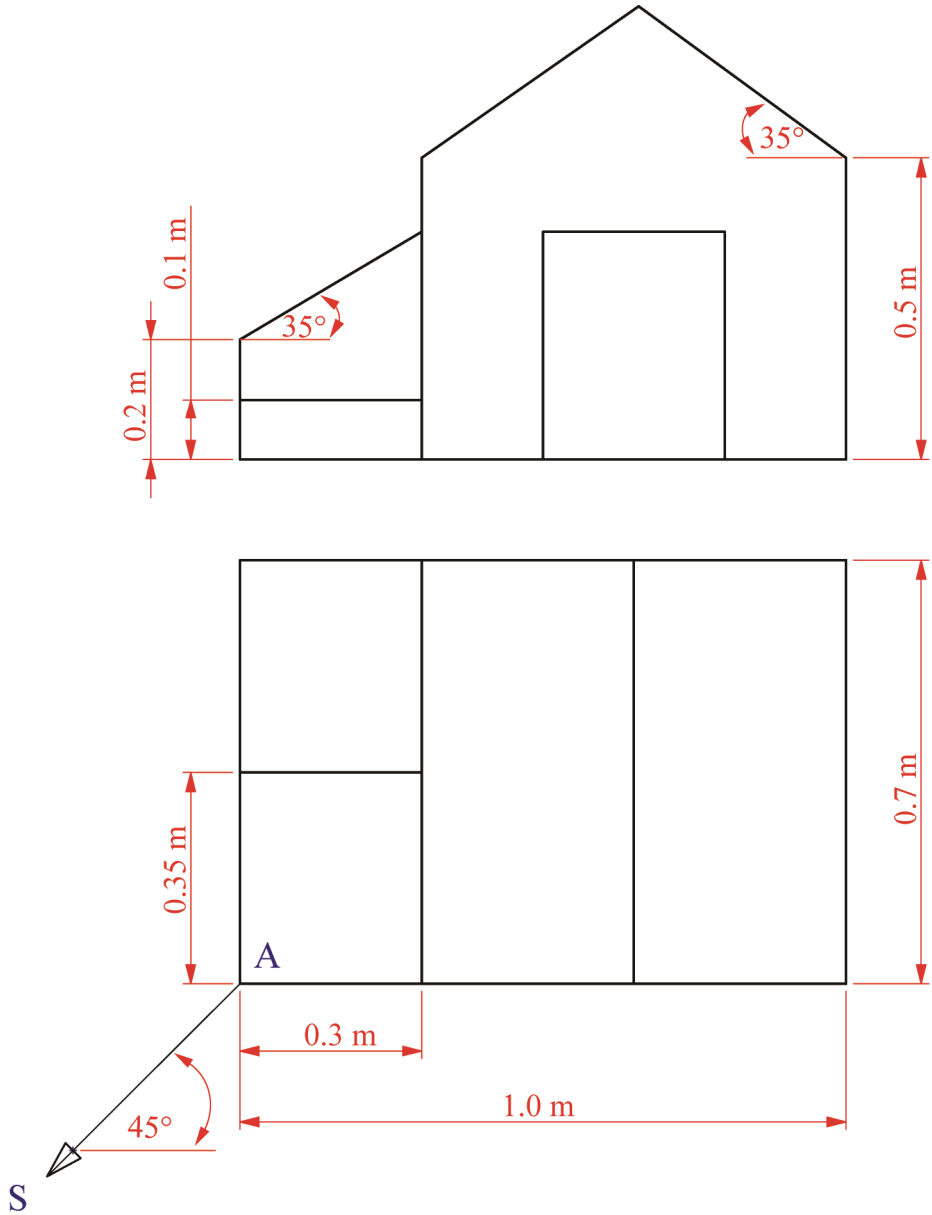

Fig. B-3

SECTION C - Applied Graphics

Answer **any two** questions (i.e. the options you have studied) from this section on drawing paper.

Geologic Geometry

C-1. **(a)** The accompanying map, located on the back page of Section A, shows ground contours at five metre vertical intervals.

On the map, **ABC** is the centreline of a proposed roadway which leads to a widened, level viewing area. The earthworks between **A** and **B** rise from an altitude of 50m at **A** to an altitude of 65m at **B**. Point **C** is also at an altitude of 65m.

Using side slopes of 1 in 1.5 for the cuttings and 1 in 1 for the embankments, complete the earthworks necessary to accommodate the roadway.

(*You may ignore the southern side.*)

(b) On the map, **P**, **Q** and **R** are three points on the surface of the earth. Vertical boreholes at these points reveal a triangle on the top surface of a stratum of ore at altitudes of 35m, 50m and 25m, respectively.

(i) Draw the plan of the triangle and determine the strike and dip of the stratum.

(ii) Determine and indicate in metres the length of the shortest skew borehole from **R** to the top surface of the stratum.

Scale 1:1000

Structural Forms

C-2. The image on the right shows the *Ciechanow Water Tower* in Poland.

Its base support is in the form of a hyperboloid of revolution. An access area intersects the tower at the top of the hyperboloid of revolution as shown.

Fig. C-2 shows the plan and elevation of a similar tower. The true length of each element of the hyperboloid of revolution is 19m.

(a) Draw the given plan and elevation.

(b) Project an end elevation of the tower.

Scale 1:200

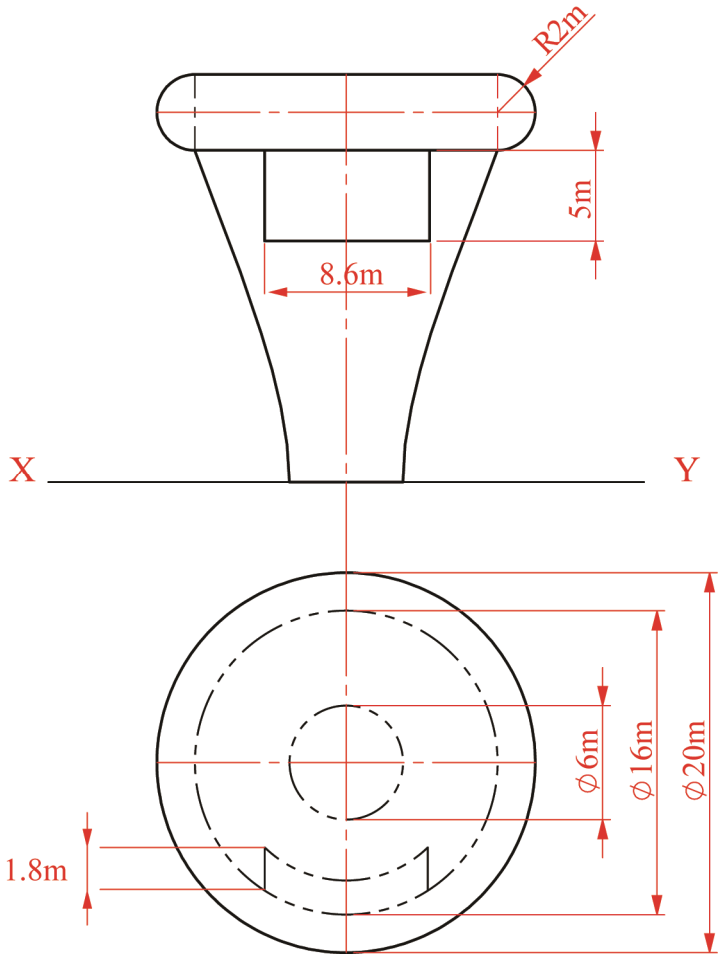

Fig. C-2

Surface Geometry

C-3. The set of *Match of the Day* is shown on the right.

Fig C-3 shows the plan and elevation of a model of the table. The table is based on an inverted square-based pyramid which is shaped in the form of a transition piece, as shown.

The dihedral angle between the table top and surface **A** is 135°.

(a) Draw the plan and elevation of the inverted pyramid.

(b) Use the **R 20** quadrant on the table top and the apex of the pyramid to draw one of the curved surfaces of the transition piece in elevation and plan.

(c) Draw an end view of the table and use it to complete the plan and elevation.

(d) Show the projection of the horizontal trace of the simply inclined plane containing surface **A**.

Scale 1:1

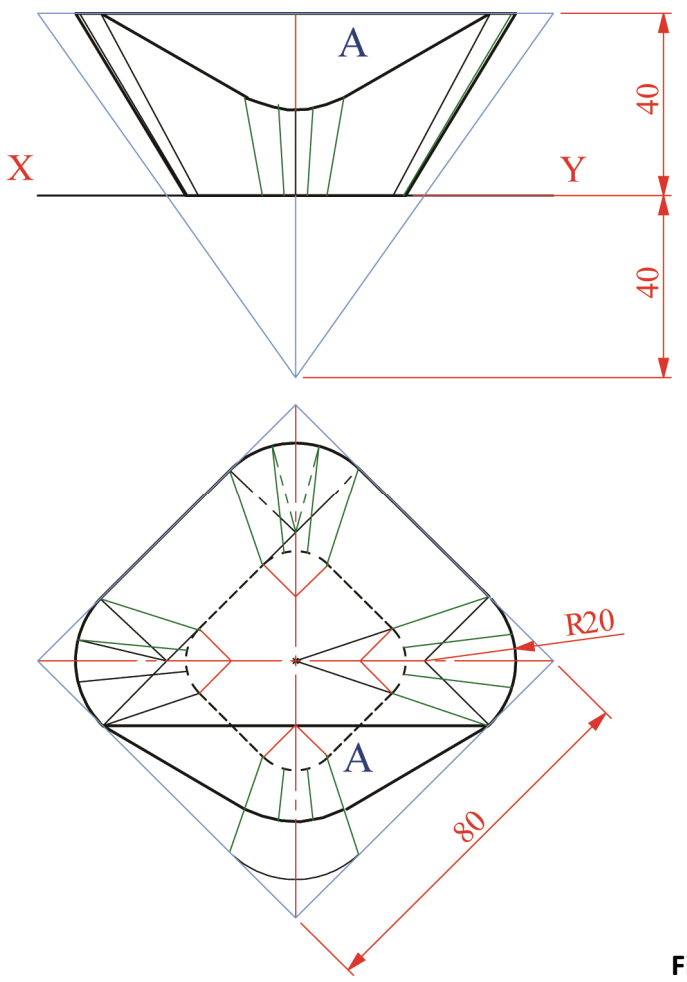

Fig. C-3

Dynamic Mechanisms

C-4. **(a)** The 3D graphic below shows a pull-along toy.

A camshaft which is fixed to one of the axles moves the head of the chimney as the wheels rotate.

The camshaft diameter is 18mm and the cam centre is 14mm below the nearest approach of an in-line knife-edge follower.
The cam rotates in an anti- clockwise direction.

Draw the displacement diagram and the cam profile, given the following data

- 0° to 90°: Simple harmonic motion rise of 30mm
- 90° to 150°: Uniform velocity rise of 10mm
- 150° to 300°: Uniform acceleration and retardation fall of 40mm
- 300° to 360°: Dwell

Scale 1:1

(b) The outline of the chimney of the train is shown. The in-line knife-edge follower is attached to the lower portion of the chimney, causing it to move up and down as the train rolls forward.

Given that the diameter of each wheel of the train is 120mm, plot the locus of point **P** as the train rolls forward for the first half-revolution of the cam.

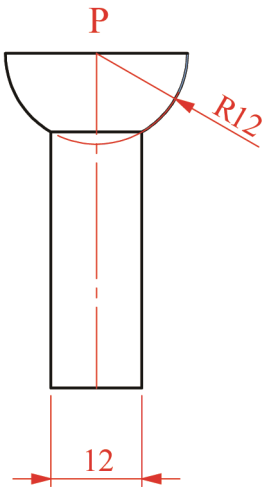

Fig. C-4(b)

Assemblies

C-5. Details of a ***ratchet mechanism*** for a clothes line are shown in Fig. C-5. The parts list is given on the right.

(a) Draw a full size sectional plan on **A-A** showing the parts fully assembled with the handle in a horizontal position. (*Unless otherwise stated all cylindrical holes are diameter 4mm and any omitted dimensions may be estimated*)

(b) Assuming that the ratchet mechanism is fixed to a vertical surface, determine the maximum angle to the horizontal that the stop catch will be inclined at while the ratchet will be in operation.

Part	Name	Qty.
1	Bracket	1
2	Spindle	1
3	Handle Arm	1
4	Handle Head	1
5	Stop Catch	1
6	Axle	1
7	12 mm Bolt	1
8	31 mm Bolt	2
9	40 mm Bolt	1

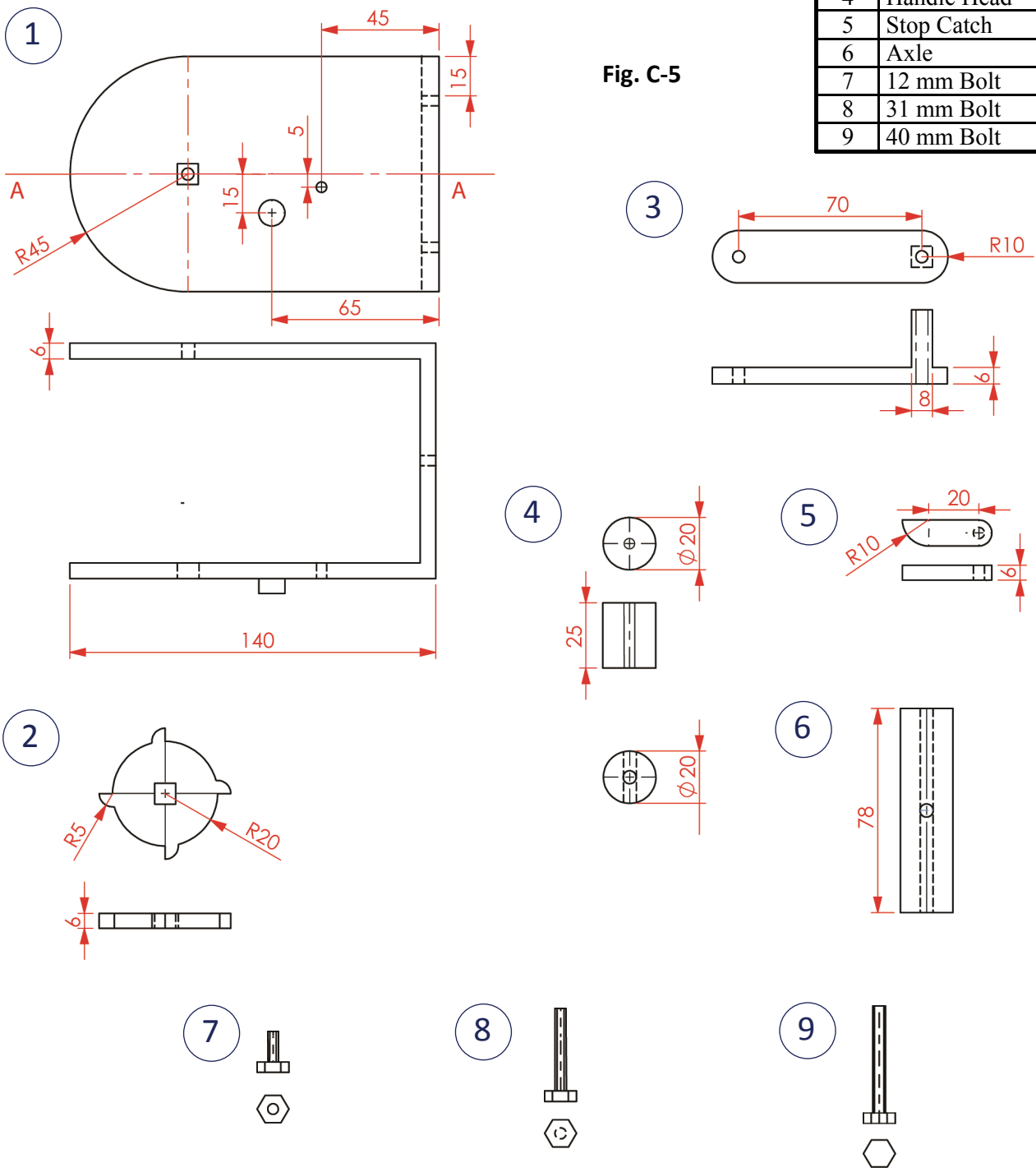

Fig. C-5

There is no examination material on this page

There is no examination material on this page

There is no examination material on this page